Grp R24 Step Sequencer Os 2.8 Release Information August 2017

Grp R24 Step Sequencer is a fairly complex machine with a complex OS. As usual, Operating System has upgrades and improvements.

Soft Revizion 2.8 offers several improvements and reorganizes all Display parameters in a clearest manner.

NOTE: *For upgrading your Grp R24 Step Sequencer, please refer* *http://www.grpsynthesizer.it/images/prodotti/R24/download/Grp-Synthesizer-R24-procedure-Upgrade_eng.pdf* *available here* http://www.grpsynthesizer.it/index.php/en/products/grp-synthesizer-r24-en.html#download.

WARNING: *Due to the massive internal memory reorganization, ALL sequences previously saved in R24 memory will be lost during software upgrade. There's no direct compatibility between old and new sequence format.*

Upgrades from Os 2.7 to 2.8
Upgrades

- In MIDI Menu, Key Velocity Assign is indipendent for Row A and B.
- LED point at lower right corner of Display will blink when R24 receives MIDI activity from external gear.
- Buttons **INC** and **DEC** now works with auto repeat.
- If you press button **STORE** for 2 seconds, you'll write data into internal memory.
- Saving data now contains all parameters Display.
- In Menu Clock Out, is now available the option *STEP*, to obtain a sync pulse on every step, wathever Step density previously choosen with *TimeDiv*.
- Time Division, Clock In e Clock Out settings are related as on the following table.

INTERNAL CLOCK		MIDI CLOCK		TTL EXTERNAL CLOCK 1		TTL EXTERNAL CLOCK 24		TTL EXTERNAL CLOCK 48	
TIME DIV	CLOCK OUT	TIME DIV	CLOCK OUT	TIME DIV	CLOCK OUT	TIME DIV	CLOCK OUT	TIME DIV	CLOCK OUT
1	1 - 24 - STEP	1	1 - STEP	1	1 - STEP	1	1 - 24 - STEP	1	1 - 24 - STEP
2	1 - 24 - STEP	2	1 - STEP	2	1 - STEP	2	1 - 24 - STEP	2	1 - 24 - STEP
2t	1 - 24 - STEP	2t	1 - STEP			2t	1 - 24 - STEP	2t	1 - 24 - STEP
4	1 - 24 - STEP	4	1 - STEP	4	1 - STEP	4	1 - 24 - STEP	4	1 - 24 - STEP
4t	1 - 24 - STEP	4t	1 - STEP			4t	1 - 24 - STEP	4t	1 - 24 - STEP
8	1 - 24 - STEP	8	1 - STEP			8	1 - 24 - STEP	8	1 - 24 - STEP
8t	1 - 24 - STEP	8t	1 - STEP			8t	1 - 24 - STEP	8t	1 - 24 - STEP
16	1 - 24 - STEP	16	1 - STEP			16	1 - 24 - STEP	16	1 - 24 - STEP
16t	1 - 24 - STEP	16t	1 - STEP			16t	1 - 24 - STEP	16t	1 - 24 - STEP
32	1 - 24 - STEP	32	1 - STEP			32	1 - 24 - STEP	32	1 - 24 - STEP

Solved bugs

- Random reset in Mode A+B+C, due to external electric noise on control analog ports.
- Erratic interpretation if more than one MIDI note was pressed for real time transpose.
- Correction of the BPM value on the display view
- *End Step management related with advanced mode will be perfected in next Soft Release 2.9. It is strongly connected with other planned functions for assign on each Row indipendent modes.*

In the next Rev 2.9, there'll be the following upgrades:

1. *Indipendent advance mode assignable for each Row.*
2. *End Step connected with advance mode.*
3. *More sync pulse options available on Clock Out Port (1-24-STEP under MIDI control; 1-24-48-STEP under Internal or TTL control).*
4. *Quantization grid V/Hz for step tuning indipendent on each Row. You'll can drive directly KORG MS-20 and old Yamaha vintage synthesizers.*
5. *Selectable Gate polarity inversion per Row (from 0/+5V to +5V/0V) for work with Hz/V.*

GLOBAL SETTINGS
Features with Os 2.8

In **GLOBAL SETTINGS**, you'll gain access to Display functions *under the hood*. The four available buttons **DEC**, **INC**, **PROGR** and **STORE** are used always in the same manner, on every parameter available.

- **DEC**, with auto repeat, scroll thru available parameters and, once reached desiderd parameters, decrease value one unit at time.
- **INC**, with auto repeat, scroll thru available parameters and, once reached desiderd parameters, increase value one unit at time..
- **PROGR**, for *to go back* at upper menu level or for abort command.
- **STORE**, it confirms command, opens menu level and, if pressed for 2 seconds, writes data in memory.

Enter into Display menu

From **BPM** display, you'll see the metronome value for sequencer.

NOTE: *Access to Display menu is possibile only with sequencer stopped.*

From **BPM** display, pressing **STORE** butto, you'll enter into available menu. Menu available are: MIDI, TIME DIVISION, FUNCTION, CLOCK, MEMORIES, MODE, ORDER, ADVANCE DIVISION (former Clock Division), FACTORY.

- **MIDI** – All MIDI parameters available indipendently for each Row.
- **TIME DIVISION** – Sequencer advance with Clock. For defining step duration against Clock.
- **FUNCTION** – There are four available function to choose for **FNC1** e **FNC2** position of three position selector **OFF/FNC1/FNC2**.
- **CLOCK** – The pulse density needed (in **CLOCK IN**) to advance Step or generated (at **CLOCK OUT**) for every Step played.
- **MEMORIES** – Writing and reading procedures for 128 internal memory locations.
- **ORDER** – 24 memory locations for iteration and permutation rules on Step advance.
- **ADVANCE DIVISION** – (formerly named CLOCK DIVISION). The Clock dividing factor indipendent on eack Row.
- **FACTORY** – Routines for trimming the sequencer, available with special password. This menu Routines for trimming the sequencer, available with special password. This menu <u>it cannot be activated</u> by the user.

NOTE: *All graphics for command sequences are from pdf document Menu Displa V2.*

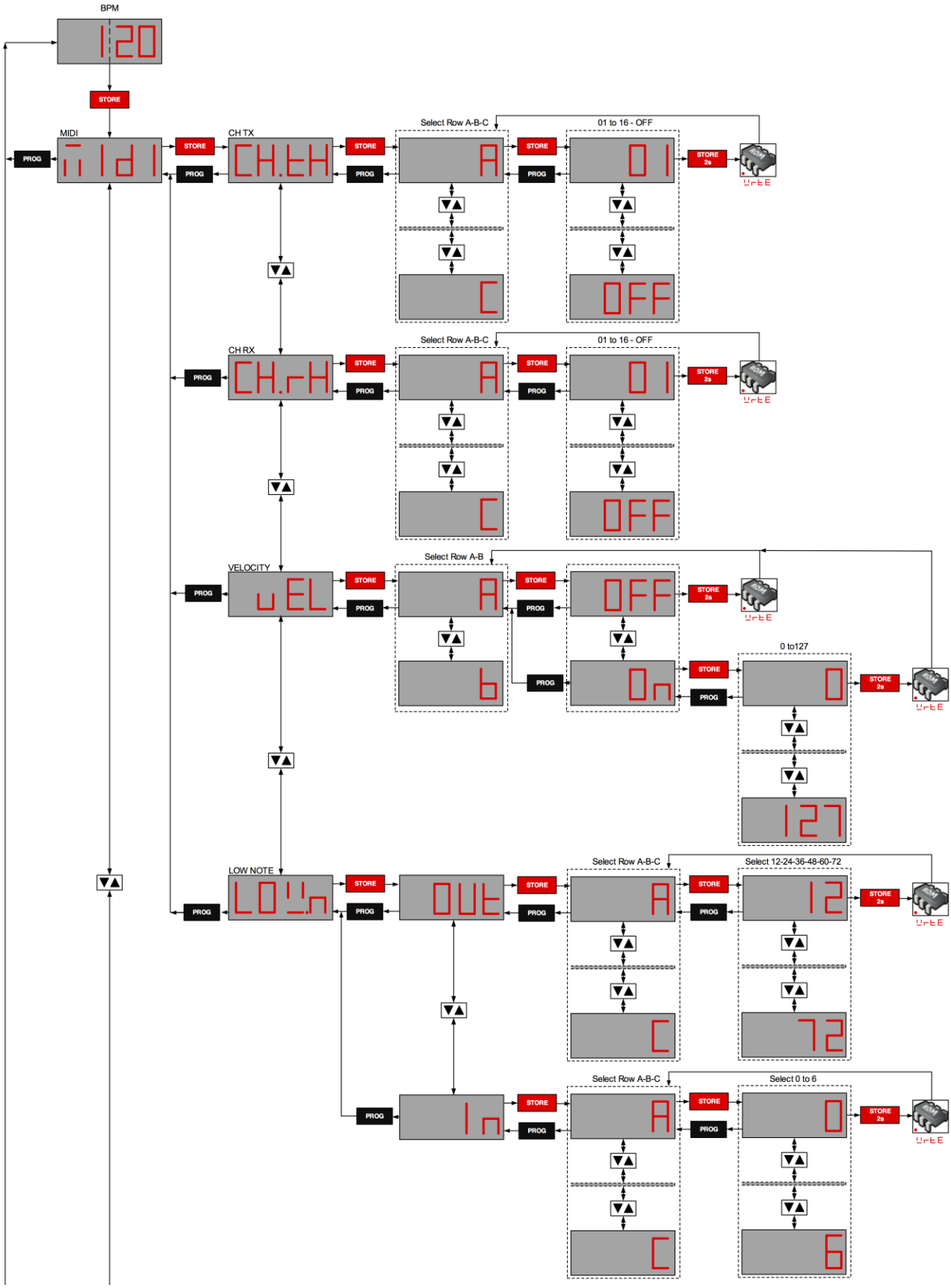

MIDI MENU

Settings in MIDI Menu are indipendent for Rows A, B and C.

NOTE: *Row selection can be realized either with buttons* ***ASSIGN ROW A****,* ***ROW B****,* ***ROW C****.*

In MIDI Menu, you can define for each Row: Transmit Channel, Receive Channel, MIDI Key Velocity transmission (from Row C Step over Row A or B notes), Low Note for transpose.

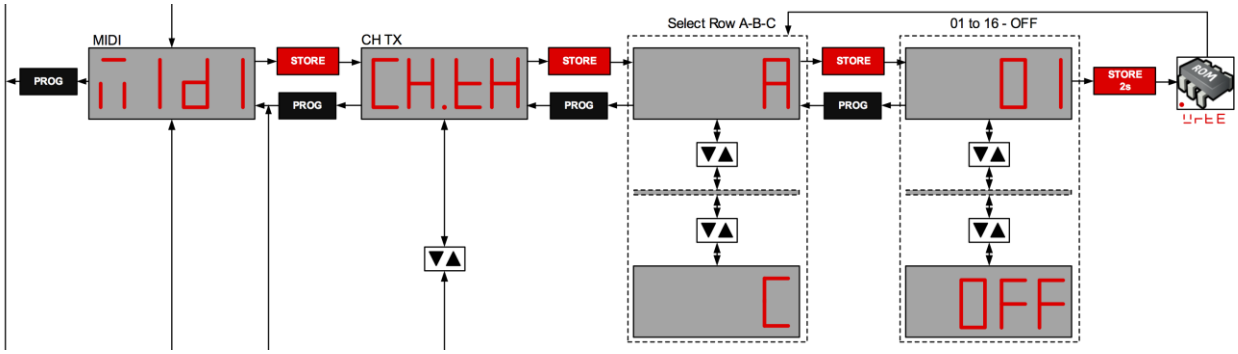

Parameter Channel Transmit
(Row A, B, C; Range Off, 01-16)
For choosing MIDI Channel Transmit on Row A, B and C.

- From **BPM** Display, pressing **STORE** for enter menus.
- With buttons **INC** and **DEC**, scroll all available menu; choose **MIDI**.
- Confirm with **STORE**, abort (going back to **BPM**) with **PROGR**.
- With buttons **INC** and **DEC**, scroll sub parameters; choose **CH.tX** (Channel Transmit).
- Confirm with **STORE**, abort (going back to **MIDI**) with **PROGR**.
- With buttons **INC** a **DEC**, select Row A, B or C.
- Confirm with **STORE**, abort with **PROGR**.
- Set the MIDI transmission channel with buttons **INC** and **DEC**.
- Confirm your choice pressing **STORE** for 2 seconds. Display goes back to Row select page.

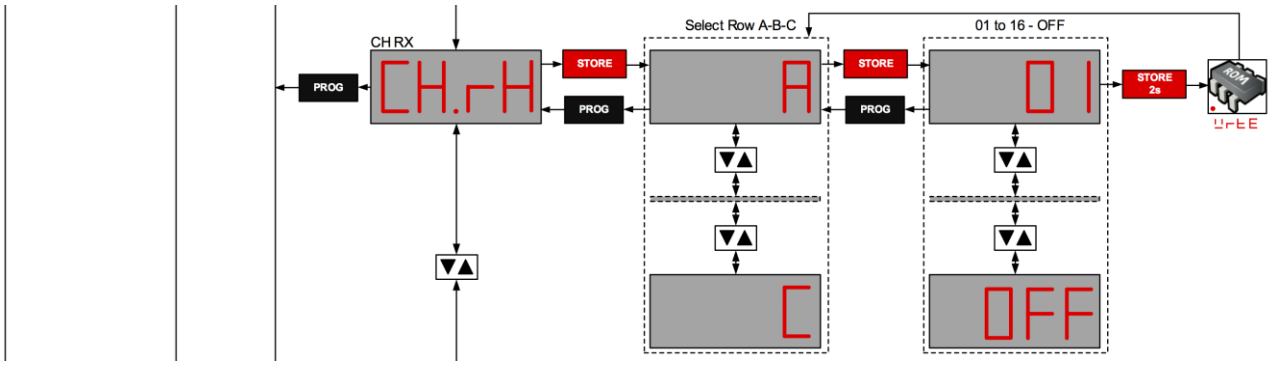

Parameter Channel Receive
(Row A, B, C; Range Off, 01-16)
For choosing MIDI Channel Received on Row A, B and C.
.

- From **BPM** Display, pressing **STORE** for enter menus.
- With buttons **INC** and **DEC**, scroll all available menu; choose **MIDI**.
- Confirm with **STORE**, abort (going back to **BPM**) with **PROGR**.
- With buttons **INC** and **DEC**, scroll sub parameters; choose **CH.rX** (Channel Receive).
- Confirm with **STORE**, abort (going back to **MIDI**) with **PROGR**.
- With buttons **INC** a **DEC**, select Row A, B or C.
- Confirm with **STORE**, abort with **PROGR**.
- Set the MIDI reception channel with buttons **INC** and **DEC**.
- Confirm your choice pressing **STORE** for 2 seconds. Display goes back to Row select page.

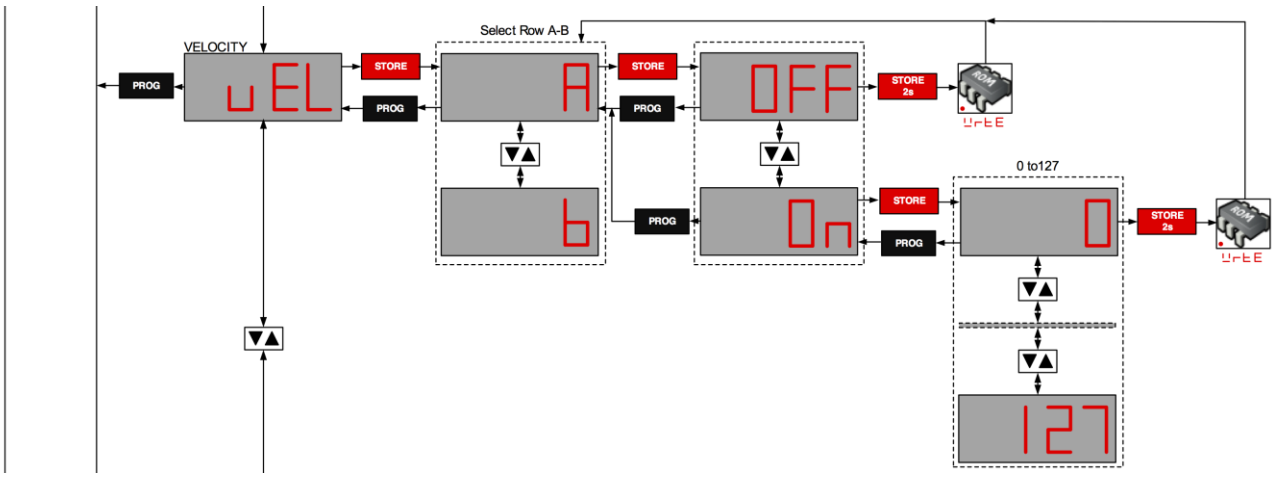

Parameter Velocity
(State On/OFF, Row A, B; Value 0-127)
You can use programmed Step values in Row C like *Key Velocity values* (e.g. second Data Byte) applyable to programmed note in Rows A, B or A&B. This can be handy when Sequencer is in **SEQ MODE A,B,C** or **A+B,C**.

- From **BPM** Display, pressing **STORE** for enter menus.
- With buttons **INC** and **DEC**, scroll all available menu; choose **MIDI**.
- Confirm with **STORE**, abort (going back to **BPM**) with **PROGR**.
- With buttons **INC** and **DEC**, scroll sub parameters; choose **vEL** (Key Velocity).
- Confirm with **STORE**, abort (going back to **MIDI**) with **PROGR**.
- Choose Row **A** o **b** with buttons **INC** or **DEC**.
- Confirm with **STORE**, then turn **ON** or **OFF** Key Velocity with **INC** or **DEC**. If confirm **OFF**, with **STORE** pressed for 2 secondi, you'll write in memory and go back at Row Selection. If **STORE** is pressed shorter than 2 secondi, you'll advance to the following display.
- Set the *maximum value for velocity* for ful cw position of Steps 17-24; with buttons **INC** and **DEC**, you scan the full range 0-127.
- Confirm with **STORE** pressed for 2 seconds.
- System goes to Row Selection Display.

NOTE: *Key Velocity values are programmed <u>with Step knobs in Row C</u>; this parameter is only for <u>enable or disable</u> Key Vel and for setting the <u>maximum value</u> in Rows A and B.*

NOTE*: With this parameter, is it possibile to subdivide MIDI Note On programming over two Sequence Rows: Rows A and B will produce always first data byte, with MIDI Note number for each Step (with user's selectable MIDI Channel); Row C will produce only the second data byte. As you can imagine, if for some reason, Rows A or B doesn't transmit MIDI note, Key Velocity alone is useless. Be careful.*

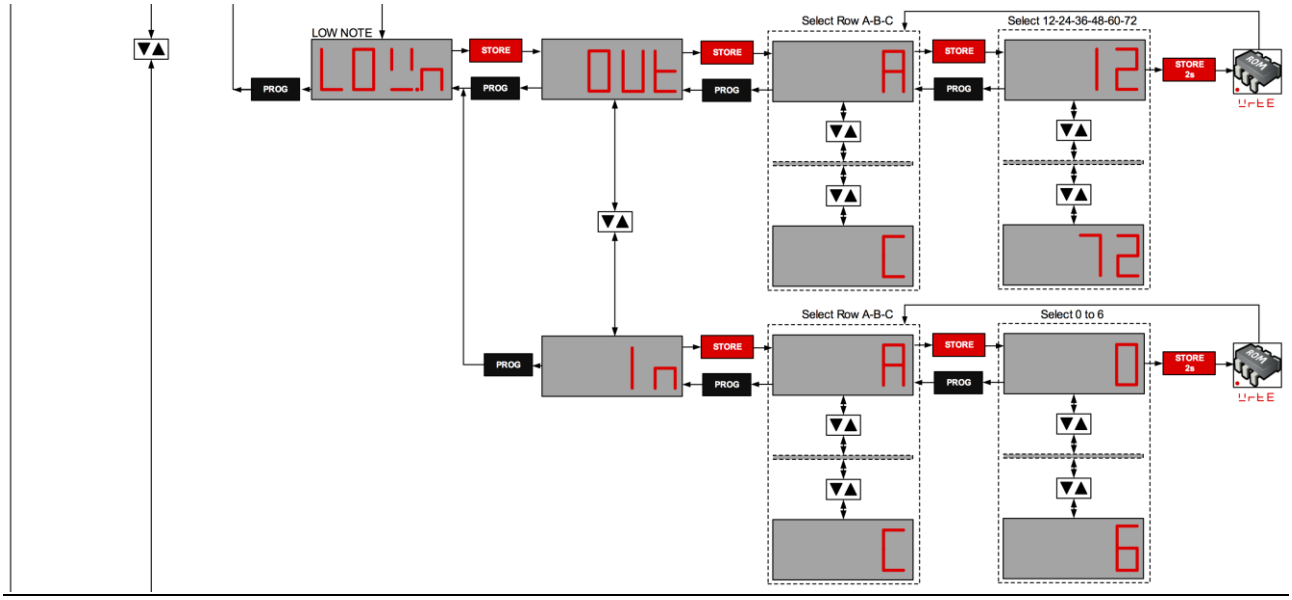

Parameter Low Note
(Row A, B, C; Value 12, 24, 36, 48, 60, 72)
Sets lowest MIDI note assigned independently on each Row for fully counter-clockwise position of Steps. This is a *double* parameter: it works on both MIDI In (real-time transpose) and MIDI Out (Sequencer outputted value). Parameter's values available allows choosing between "C note" values on keyboard expressed in decimal numbers. So, is it possibile to select C1 (MIDI Note 12), C2 (MIDI Note 24), C3 (MIDI Note 36), C4 (MIDI Note 48), C5 (MIDI Note 60), C6 (MIDI Note 72), C7 (MIDI Note 84).

- From **BPM** Display, pressing **STORE** for enter menus.
- With buttons **INC** and **DEC**, scroll all available menu; choose **MIDI**.
- Confirm with **STORE**, abort (going back to **BPM**) with **PROGR**.
- With buttons **INC** and **DEC**, scroll sub parameters; choose **LOVn** (Low Note).
- Confirm with **STORE**, abort (going back to **MIDI**) with **PROGR**.
- With buttons **INC** or **DEC**, choose Low Note in MIDI reception (**In**) or in transmission over MIDI Out (**Out**).
- Confirm with **STORE** (system goes to Row selection), abort with **PROG**
- Si conferma con **STORE** (e si passa alla scelta della Fila), si abortisce con **PROG** (going back to sub menu page).
- With buttons **INC** or **DEC**, choose Row A, B or C.
- Confirm with **STORE** (then, you can choose desired value: 12, 24, 36, 48, 60, 72, 84), abort with **PROGR**.
- After have choosen, press **STORE** for 2 two second for write in memory. System goes back to Row selection page.

Programming procedure is the same for Low Note In and Low Note Out.

***NOTE: T**his "offset" parameter for lowest note is active only on MIDI port ad has absolutely no value over analog ports CV OUT. Analog CV emitted when Step value is in full counter clockwise position is always 0 Volt.*

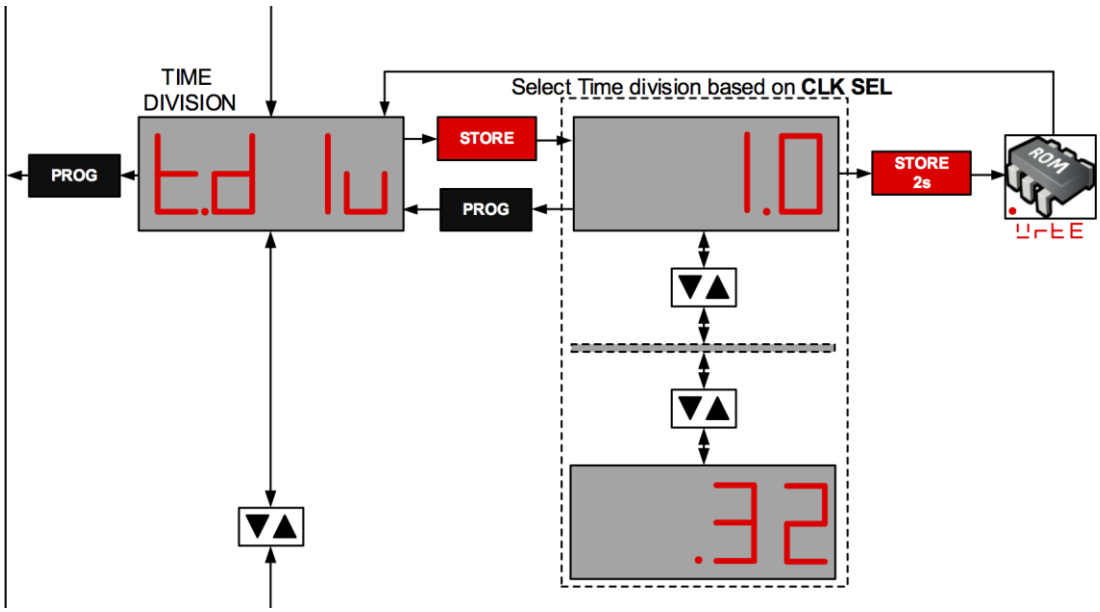

MENU TIME DIVISION

Contains only one parameter for defining – *in common for all three Rows* – rhythmic value of Steps evaluated *against Clock MIDI, INT or EXT*.

NOTE: *To obtain an independent advancing speed on each Row, use* ***CLK DIV*** *parameter, available on each Row's control unit (Front Panel, column at right of Steps).*

Parameter Time Division
(1, 1t, 2, 2t, 4, 4t, 8, 8t, 16 default, 16t 32)
The dividing factor/rhythmic value for Step applied to Clock sources is valid for all three Rows.

- From **BPM** Display, pressing **STORE** for enter menus.
- With buttons **INC** and **DEC**, scroll sub parameters; choose **t.dIv** (Time Division).
- Confirm with **STORE**, abort (going back to **BPM**) with **PROGR**.
- Choose dividing factor/rhythmic value for Step with **INC** or **DEC**, confirm with **STORE** pressed for 2 second.

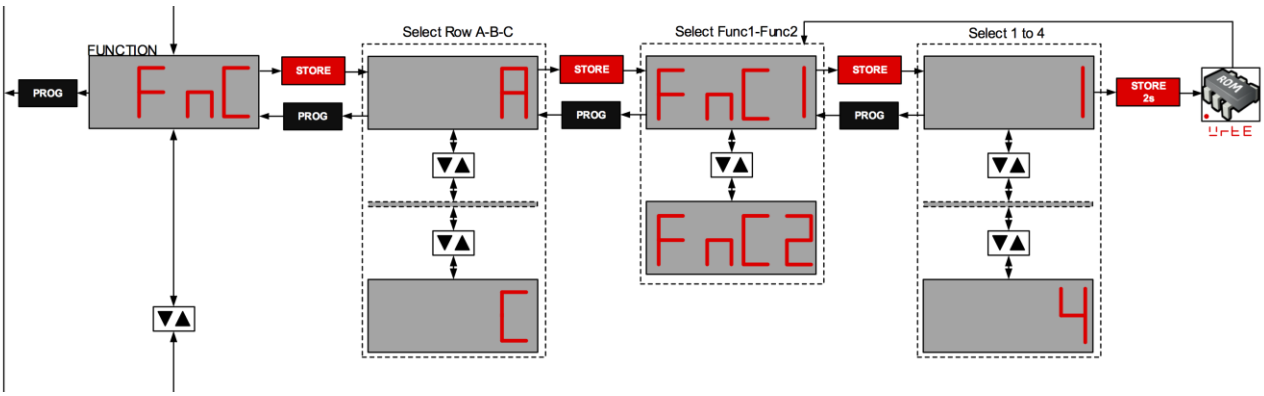

FUNCTION MENU

Contains a menu of *functions* applyable independently on Rows A, B and C. Each Row can have *a couple* of functions freely user's selectable and assigned on both physical position of switch **OFF / FNC1 / FNC2** available on each Step.

Parameter Function
(Row A, B, C, Function 1, 2, 3, 4)
From Rev 1.0, there are *four* functions available:

- Function 1 = Portamento On/Off independent on each Step.
- Function 2 = Double Ratchet on each Step.
- Function 3 = Triple Ratchet on each Step.
- Function 4 = Quadruple Ratchet on each Step.

NOTE: *When selecting individua Portamento On/Off, each Step can have or not have the typical "slide" behavior. Portamento speed is always defined with* ***PORTAMENTO*** *control independently available on each Row.*

NOTE: *Step duration will remains the same, on every density of Ratchet/bounces. E.g., if a Step lasts one quarter note, dual Ratchet will create two eigth notes; triple Ratchet will create three tripleted eight notes; quadruple Ratchet will create four sixteen notes.*

This is the procedure for reach the parameter, choose desired Row and select, on each Row, *the couple* of functions available.

- From **BPM** Display, pressing **STORE** for enter menus.
- With buttons **INC** and **DEC**, scroll sub parameters; choose **FnC** (Function).
- Confirm with **STORE**, abort (going back to **BPM**) with **PROGR**.
- Choose Row A, B or C with **INC** or **DEC**
- Confirm with **STORE**, abort with **PROG**.
- With buttons **INC** or **DEC**, choose desired function to load on three-position front panel selector **OFF/FNC1/FNC2** available on each Step; position loadable are, as you can imagine, **FnC1** and **FnC2**.
- Confirm with **STORE**, abort with **PROG**.
- Choose with **INC** or **DEC** one of the four available function.
- Confirm with **STORE**, keep it pressed for 2 seconds. Systems goes back to function selection page.
- Continue with selection for the other position **FnC2**, if necessary.

NOTE: FNC1 *and* ***FNC2*** *selection is independent on each Row for switch Step* ***OFF/FNC1/FNC2****, with no respect for* ***SEC MODE*** *selected. This can lead to extremely flexibility in working condition (Steps 1-8 behavior can be different from Steps 9-16 behavior), but either to a potentially confusing condition. Be warned.*

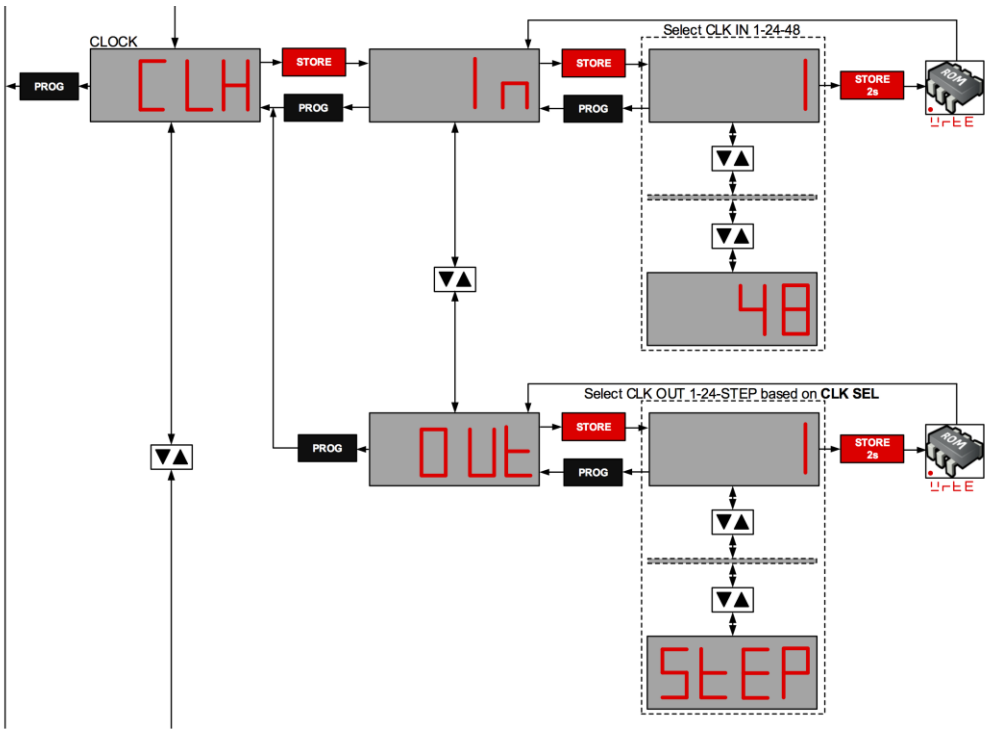

CLOCK MENU

Sets *density* of Clock pulses transmitted on **CLOCK OUT** port and received at **CLOCK IN** port needed for advance each Step.

Parameter Clock
(Clock Out, In; Density 1, 24, STEP –only Out)
On density 1, each pulse received at port **CLOCK IN** will advance one Step in Sequence; if density selected is 24 or 48, you'll need 24 or 48 pulses to advance one Step in Sequence.

NOTE: *Clock density output cannot be superior to density selected for Clock In.*

- From **BPM** Display, pressing **STORE** for enter menus.
- With buttons **INC** and **DEC**, scroll sub parameters; choose **CLK** (Clock).
- Confirm with **STORE**, abort (going back to **BPM**) with **PROGR**.
- Choose Row A, B or C with **INC** or **DEC**
- Confirm with **STORE**, abort with **PROG**.
- With **INC** or **DEC**, choose Clock **In** or Clock **Out**.
- Confirm with **STORE**, abort with **PROG**.
- In **Clock IN**, choose with **INC** or **DEC** density 1, 24 or 48.
- Confirm with **STORE** pressed for 2 seconds; display reverts back at **In** page.
- In **Clock Out**, choose with **INC** or **DEC** density 1, 24 or STEP.
- Confirm with **STORE** pressed for 2 seconds; display reverts back to **Out** page.

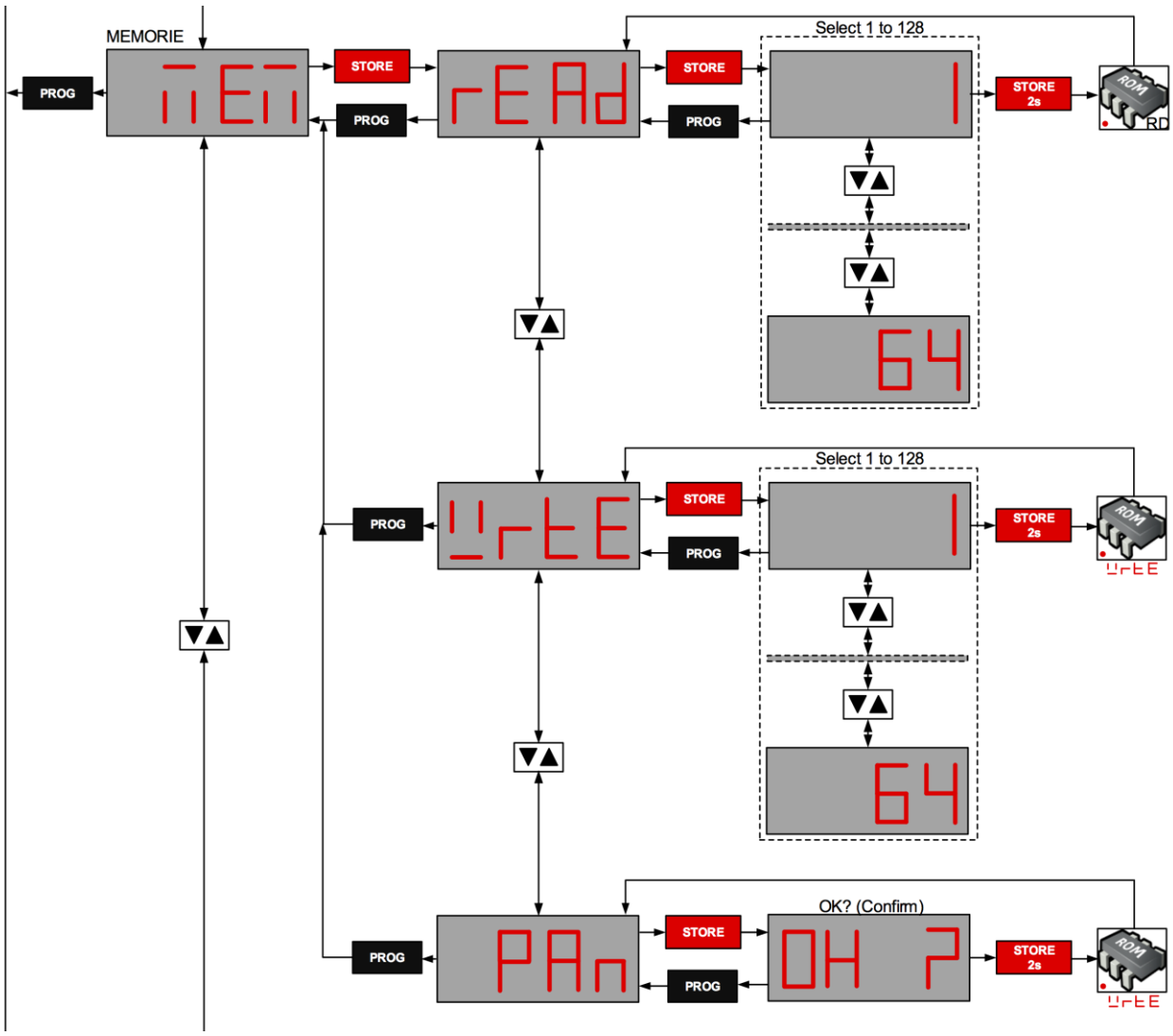

MEMORY MENU
Contains commands for write or read data into 64 available memory locations o **R24**. Contains too access to *Panel Mode* (e.g. user works with "the real physical position" of all control on the front panel. Keep in mind that writing memory saves *all* panel and display parameters.

WARNING: *Due to the massive internal memory reorganization, ALL sequences previously saved in R24 memory will be lost during software upgrade. There's no direct compatibility between old and new sequence format.*

Parameter Read
(Location 1- 64)

- From **BPM** Display, pressing **STORE** for enter menus.
- With buttons **INC** and **DEC**, scroll sub parameters; choose **MEM** (Memory).
- Confirm with **STORE**, abort (going back to **BPM**) with **PROGR**.
- Choose, with **INC** or **DEC**, whether to work on Read (**rEAd**), Write (**WrTE**) o Panel (**PAn**).
- Coose **rEAD** for reading one previously saved sequence.
- Confirm with **STORE**, abort (going back to **BPM**) with **PROGR**.
- Choose selected memory (1-64) with buttons **INC** and **DEC**.
- Confirm with **STORE** pressed for 2 seconds. Display goes back to **rEAD**. From here, with **PROG**, you can leave the menu or, with **INC** or **DEC**, you can choose the other two sub parameters/commands for write memory and for select full panel real time.

Parameter Write
(Location 1-64)

- From **BPM** Display, pressing **STORE** for enter menus.
- With buttons **INC** and **DEC**, scroll sub parameters; choose **MEM** (Memory).
- Confirm with **STORE**, abort (going back to **BPM**) with **PROGR**.
- Choose, with **INC** or **DEC**, whether to work on Read (**rEAd**), Write (**WrTE**) o Panel (**PAn**).
- Coose **WrTE** for saving one sequence.
- Confirm with **STORE**, abort (going back to **BPM**) with **PROGR**.
- Choose memory (1- 64) with buttons **INC** and **DEC**.
- Confirm with **STORE** pressed for 2 seconds. Display goes back to **WrTE**. From here, with **PROG**, you can leave the menu or, with **INC** or **DEC**, you can choose the other two sub parameters/commands for read memory and for select full panel real time.

Parameter Pan(el)

- From **BPM** Display, pressing **STORE** for enter menus.
- With buttons **INC** and **DEC**, scroll sub parameters; choose **MEM** (Memory).
- Confirm with **STORE**, abort (going back to **BPM**) with **PROGR**.
- Choose, with **INC** or **DEC**, whether to work on Read (**rEAd**), Write (**WrTE**) or Panel (**PAn**).
- Coose **Pan** for working with front panel in real time.
- Confirm with **STORE**, abort (going back to **BPM**) with **PROGR**.
- Display ask for confirmation with **OK ?**.
- Confirm with **STORE** pressed for 2 seconds. Display goes back to **WrTE**. From here, with **PROG**, you can leave the menu or, with **INC** or **DEC**, you can choose the other two sub parameters/commands for read or write memory.

NOTA: *On power-up,* ***R24*** *is always in Panel Mode.*

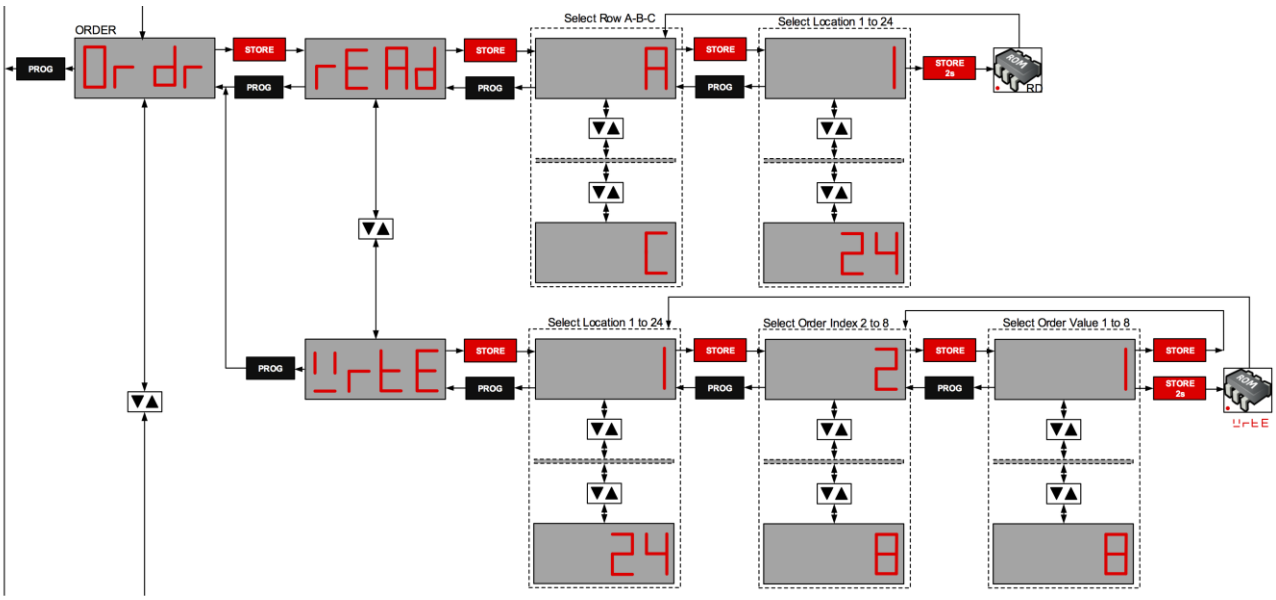

ORDER MENU

With this menu, you can customize Row per Row the rules of active Steps advance and iteration. The brand new *law* user's customizable can be recalled later turning on the **D** position in LED ladder segment on **ORDER** parameter available on each Row's control unit.

Parameter Order Read
(Row A, B, C; Location 1-24)

- From **BPM** Display, pressing **STORE** for enter menus.
- With buttons **INC** and **DEC**, scroll sub parameters; choose **Ordr** (Order).
- Confirm with **STORE**, abort (going back to **BPM**) with **PROGR**.
- Choose, with **INC** or **DEC**, whether to work on Read (**rEAd**) or Write (**WrTE**).
- Coose **rEAD** for assign one of 24 available orders to selected Row.
- Confirm with **STORE**, abort (going back to **BPM**) with **PROGR**.
- Display ask for Row A, B or C; choose with buttons **INC** or **DEC**.
- Confirm with **STORE**, abort with **PROGR**.
- Choose, with **INC** or **DEC**, one of 24 memory locations.
- Confirm with **STORE** pressed for 2 seconds. Displays reverts back to Row selection. From here, with **INC** or **DEC**, you can work on other Rows, or go back to other sub parameters with **PROG**.

Parameter Order Write
(Row A, B, C; Location 1-24; Listing: Step-# of Step)

- From **BPM** Display, pressing **STORE** for enter menus.
- With buttons **INC** and **DEC**, scroll sub parameters; choose **Ordr** (Order).
- Confirm with **STORE**, abort (going back to **BPM**) with **PROGR**.
- Choose, with **INC** or **DEC**, whether to work on Read (**rEAd**) or Write (**WrTE**).
- Coose **WrTE** for programming one of 24 available orders to selected Row.
- Confirm with **STORE**, abort (going back to **BPM**) with **PROGR**.
- Display ask to choose one of 24 available writing locations with buttons **INC** or **DEC**.
- Confirm with **STORE**, abort with **PROGR**.
- Choose, with **INC** or **DEC**, *the index order for Step #2***.** Now, R24 is waiting to know what Step # play "as second step in the sequence" (first step is always the first of ther Row, no variation on it).
- Confirm with **STORE**, abort with **PROG**.
- Choose, with **INC** or **DEC**, *order value for Step # 2***.** You should insert the step # to be played as second step.

- Confirm with **STORE**, abort with **PROG**.
- Repeat steps until completion of all *seven* available locations in sequence order.
- Confirm with **STORE**. Display reverts to *order index* selection. If **STORE** is pressed for 2 seconds, the entire order programmed will be written in memory.

NOTE: *As stated above, each of 24 available ORDERs has a maximum lenght of 8 possible lines; each line contains a reference Step number comprised between 1 and 8.*

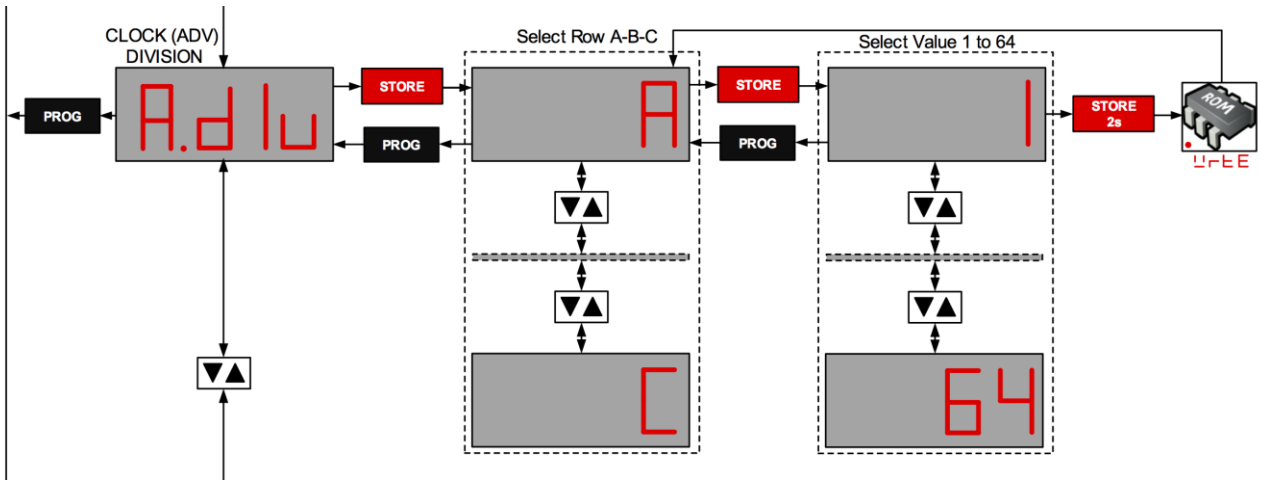

ADVANCE DIVISION MENU (FORMER: CLOCK DIV)

Each Row can have its own Clock Advance Dividing Value, specifying the number of pulses needed for advance one Step against Clock (indifferenty Int, MIDI or EXT). Selected dividing factor will be called with position **D** in LED ladder on **ADV DIV** available on each Row's control unit.

Parameter Advance Division
(Row A. B, C; Value 1- 64)

- With **INC** and **DEC**, reach menu **A.div** (Advance Division).
- Confirm (and enter) with **STORE**, abort with **PROG**.
- Display asks for Row selection A, B or C; select desired Row with **INC** or **DEC**.
- Confirm with **STORE**, abort with **PROG**.
- Choose, with **INC** or **DEC**, dividing factor between 1 and 64 for previously selected Row.
- Confirm with **STORE** pressed for 2 seconds. Display goes back to Row selection.

NOTA: *The combined action of* ***ADVANCE DIVISION*** *(especially if set on extreme dividing factors) and* ***TIME DIVISION*** *on CLOCK source, can lead* ***R24*** *Step Sequencer to extremely slooooooow Step advance behavior. Be warned.*

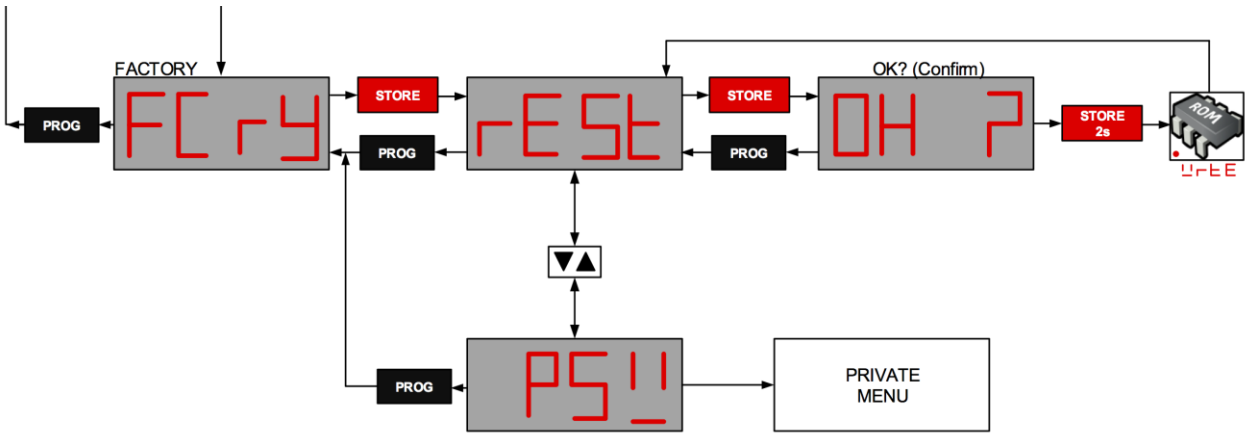

FACTORY MENU
Gives access to calibration and reset procedures. Calibration routines aren't user accessible, so there is a 4-digit password to avoid undesired tampering.

Parameter Reset
For driving back internal settings on Step Sequencer **R24** to pristine factory condition.

- Reach menu **FCrY** (Factory) with buttons **INC** or **DEC**.
- Confirm and enter with **STORE**, abort with **PROG**.
- You can choose between **rESt** (reset – the only one user's selectable) and **PSW** (password – reserved for assistance). Choose, as usual, with **INC** or **DEC**.
- Confirm with **STORE**, abort with **PROG**.
- Display ask confirmation with **OK ?**.
- Confirm with **STORE** pressed for 2 seconds (display goes back to **rESt** or **PSW** choice), or abort with **PROG** (same destination with display).

The instruments performs an entire reset cycle.